PRATT

industrial design department

SHOP SAFETY MANUAL

This booklet is intended as a reference guide and supplement to the shop certification classes.
Study of this booklet does not qualify any student to use the Pratt Industrial Design Shop.

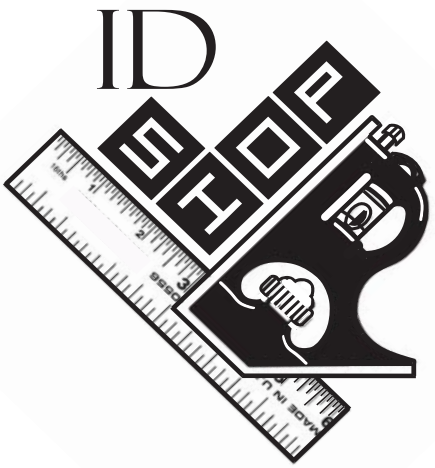

TABLE OF CONTENTS

General shop safety

Wood and metal working machines are designed to cut, abrade, slice, drill, etc. They are very helpful when used properly but very dangerous when used carelessly. Lack of care, lack of attention or concentration, or lack of tool knowledge are the most common causes of injuries in the shop. It is a rare case where some external force causes an "accident".

In many circumstances universities are the place where experimentation is to be encouraged and praised, but the shop is NOT a place for experimentation with tools. Students who attempt to use tools by "figuring it out on their own" may be ejected from the shop. The number one shop rule is **"if you are not 100% sure about the operation of a tool or the safety of a cut - ask a technician"**.

Injuries are more frequent during the end of semester rush when students are often sleep deprived and under extreme pressure to complete projects. If shop technicians suspect that any student is mentally impaired (due to lack of sleep, medication, drugs, alcohol, stress) that student will be expelled from the shop. We are very serious about protecting students in the shop. With proper training and the cooperation of students most if not all injuries can be avoided.

All students wishing to use the Pratt Industrial Design Shop are required to complete an official certification course before they are allowed access to shop facilities.

Approved materials in the shop

Softwoods containing high amounts of pitch (sap) such as fir, pine, hemlock cause pitch build-up on the blades and other parts of machines. We may allow a few cuts to be done with these woods but if you come in the shop planning to do a whole project with any of these woods we will not allow it. Purchase hard woods such as poplar or bass wood (which are also good for painting). The terms softwood and hardwood refers to the botanical grouping of trees rather than the properties of the wood (though most hardwoods are hard). Softwood comes from coniferous trees and hardwood come from broad-leaved trees.

NO FOUND/RECLAIMED WOOD IS ALLOWED TO BE CUT IN OUR SHOP. Reclaimed wood can have sand, gravel, pieces of screws, nails, paint, any of which will ruin blades and possibly become flying shrapnel.

No pressure treated wood is allow to be cut in our shop. Pressure treated lumber (which has a green tint) contains toxins harmful breath.

examples of unsafe shoes which are not allowe in the shop.

three rules violated

Health hazards

Our respiratory system and our hearing are also at risk of being damaged in shop settings. Dust in the shop can contain allergens, toxins, and carcinogens. Many exotic woods contain allergens which can cause skin rashes or respiratory problems. Manufactured sheet materials often contain formaldehyde and other chemicals which are harmful to breath. The dust of many natural woods can cause respiratory irritations, or skin reactions. For more information look online under Health & Safety in the Arts: Woodworking, toxic woods.

We recommend good quality dust masks when working (especially when sanding) in the shop. For every ones sake, we also ask that you remember to have the technician or work study turn on the dust collector of the machines you intend to use.

The sound decibel level in the shop is often high enough to cause hearing damage and therefore we recommend hearing protection. The tool crib has ear muffs for check out.

Spray Paints

Only water based (latex) or other non-toxic sprays are allowed in the Industrial Design Department facilities. Students using oil or lacquer based paint such as Krylon, Rustoleum, Plasti-kote, etc. (from an aerosol can or a pressure spray gun) may be banned from the shop facilities for an extended period of time.

Shop rules are in place for the protection of everyone. Non-compliance of rules can result in injury to oneself or OTHERS in the shop. All students are required to learn and practice the shop rules. Ignorance of the rules is not a valid excuse and violators may be expelled from the shop for an extended period of time.

SHOP RULES:

1 > YOU MUST BE SURE -
If you are not 100% sure about any tool operation or the safety of a cut - ask a technician. DO NOT TRY TO FIGURE OUT HOW TO USE A MACHINE ON YOUR OWN !!!!!

2 > You must follow the directions of the technicians.

3 > EYE PROTECTION -
Eye safety goggles/glasses must be worn while operating any power or hand tools in the shop. Regular eyeglasses are not considered safety glasses.

4 > PROPER ATTIRE –
- Hair must be securely bound behind the head.
- No shoes which expose the top of the feet.
- No baggy or loose fitting clothing, no cords hanging, no scarves, no gloves, shirt-tails must be tucked in / long sleeves rolled-up.
- No jewelry on the arms or fingers, nothing hanging from the neck, no wrist watches.

5 > No using tools when fatigued or under the influence of any mind impairing drugs (medication) or alcohol. Your mind must be alert and present.

6 > Never remove blade guards without permission from a technician.

7 > No head-sets / i-pods. The technicians must be able to call out and get your attention.

8 > No talking to someone who is using a power tool. Distracting a tool operator is dangerous.

9 > No horseplay or practical joking in the shop.

10 > You must pick up your off-cut pieces of material. Someone may slip or trip on your debris.

11 > CLEAN UP YOUR MESS BEFORE LEAVING THE SHOP!!!

The Jointer

The jointer is designed to make the surface of a piece of solid wood flat and straight. If used correctly the jointer will remove any twist, bowing, or warping from the face of a board. The edge can also be made straight, flat and perfectly square to the face. Your board can then be taken to the planer or table saw to do further cutting.

The jointer (and the thickness planer) will only work for solid woods - no manufactured boards (no mdf, particle board, pressed bamboo, acrylics, etc.)

How a jointer works can be understood by looking at the illustration below. The infeed table is adjusted slightly lower than the outfeed table. The outfeed table remains aligned with the top edges of the cutter knives **(do not lower the outfeed table).** This allows the cutterhead to remove material from the board while keeping the board on a level plane.

The fence supports the board for jointing the edge. The fence can be tilted to achieve angled edges.

Hazards of the jointer

Injuries that occur with the jointer involve hands slipping off the board and touching the cutter head.

Kickback is also a possibility if too deep of a cut is attempted, and when jointing a board's face this is especially true because of the large area of blade/wood contact.

Carefully and correctly feeding your board into the jointer will prevent any injury.

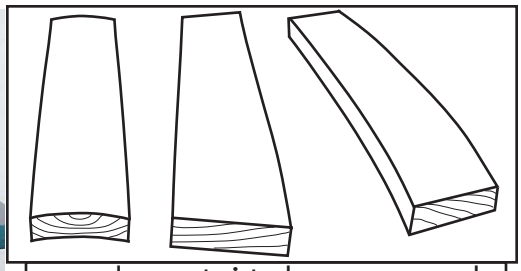

DEPTH OF CUT EXAGGERATED FOR ILLUSTRATION

In the above illustration you can see that as the cutterhead removes material the outfeed table supports the board after it has been made thinner. The outfeed table is pre-set at a height in line with the highest point of the blade.

The vibration of the cutterhead planing a small piece can cause it to tip into the cutterhead resulting in kickback.

Boards must be a minimum of 10 inches long

Jointing the face surface

Check that the blade guard is in good working order.

When jointing the face of a board have the cupped side down to prevent the board from rocking as it passes over the cutterhead. (see illus. at right)

Check the depth of cut to be sure that it is not excessive. Excessive depth could result in kickback.

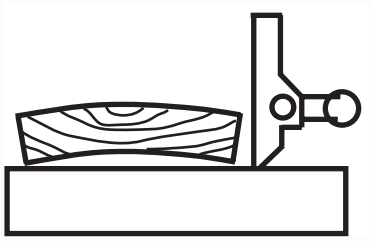

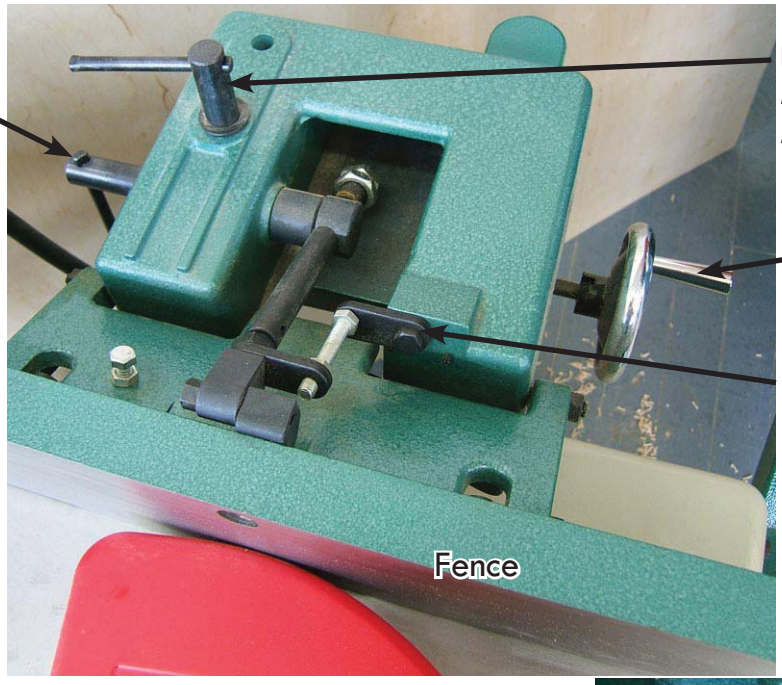

Fence angle lock
Must be loosened
to change the fence
angle

Fence lock
MUST BE LOOSENED BEFORE
MOVING FENCE

Move fence crank

Holds fence at 90 degrees

The fence may need to be moved to accommodate the width of your board.
When jointing the face of a board 1/32" to 1/16" is a good amount to remove with one pass. It is far safer to make several passes than to attempt to remove a lot of material with one pass.

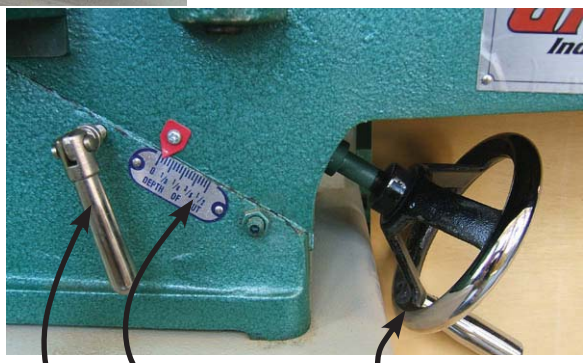

Cut depth scale

infeed table
height crank

infeed table lock

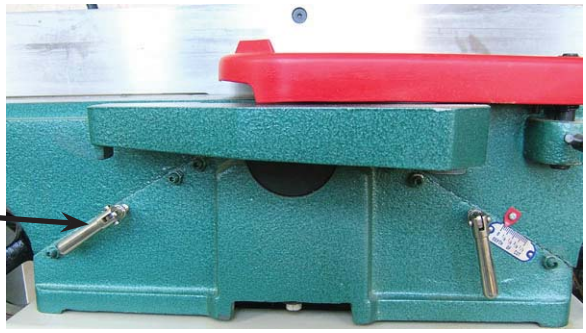

Outfeed table
lock
DO NOT ADJUST

Hold your board down on the table using a push-pad on the leading end and a push board catching on the trailing end.
As you feed the board over the cutterhead step forward to transfer your weight and keep your balance.

Jointing the edge of a board

If you want a truly square edge check the fence for squareness. Set the cut depth to 1/32" - 1/16". Place your board on the table so that the flat and straight jointed face is against the fence.

Holding the board firmly against the fence and down on the table pass the edge over the cutterhead. Feed the board with your right hand keeping the left hand stationary. The left hand should not pass over the cutterhead.

Take a step forward to transfer your weight. When there is about 12 inches on the outfeed table stop feeding the board and transfer your hand to the position shown above (left hand over the outfeed table) and then continue to slide the board over the cutterhead while the left hand holds the board firmly against the fence.

With your left hand in this position, as the board is being pushed over the table there is the chance that fingers could slip down into the cutterhead.

With your left hand in this position, if your hand happens to slip down there is no chance of injury.

If your board is less than 6" wide use a push board on the back end to complete the operation.

The Thickness Planer

The thickness planer has a motor driven infeed roller which pulls a board through/over the planer table and past a cutterhead which planes off the surface of the board. (see FIG. 1A) The table and table rollers are set parallel to each other so that the opposite face surfaces of a board become parallel planes. **As with the jointer, ONLY SOLID WOOD can be planed - NO MDF, PARTICLE BOARD, PLYWOOD, BAMBOO, PLASTICS, OR ANY MANUFACTURED COMPOSITE. ALSO NO RECLAIMED LUMBER IS TO BE PASSED THROUGH THE THICKNESS PLANER.**

The thickness planer is often mistakenly thought of as a tool that can take a curved or twisted board and make it flat and straight - it will not. If your board is curved the thickness planer will give you a thinner curved board. Your board must first be made straight and flat on one face surface (with a jointer or hand plane) and then the thickness planer will make the other face surface parallel.

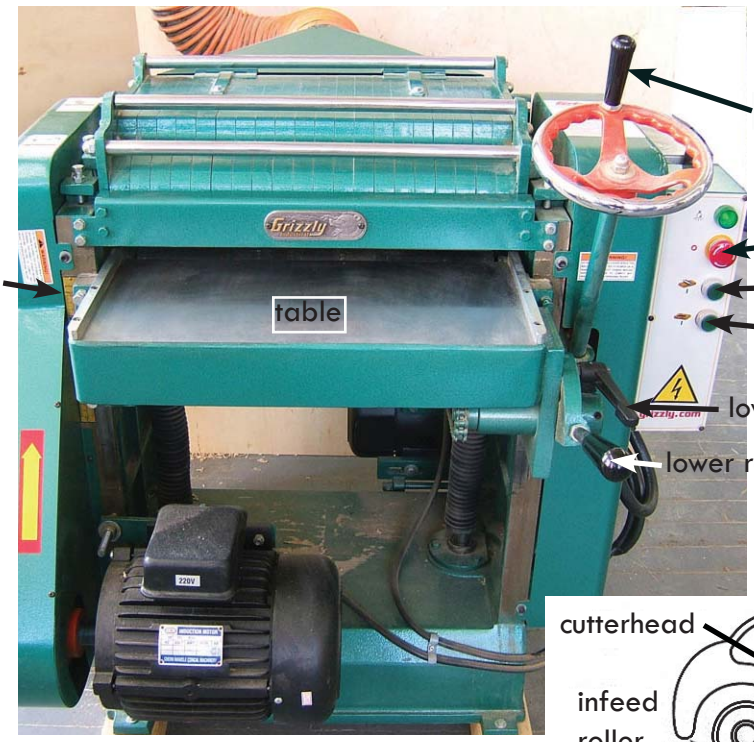

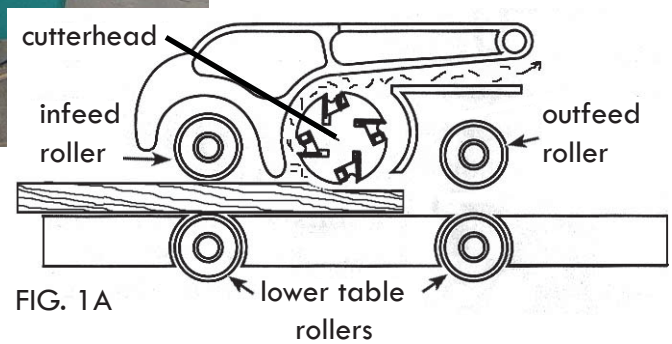

FIG. 1A

The cutterhead planes off material from the top surface. The lower table rollers should be set so that they barely protrude above the table surface. If they are set too high a snipe (deeper gouge at the end of the board) will happen.

Hazards of the Thickness Planer

Used properly the thickness planer is a relatively safe power tool.

Kickback is a possibility if the table height is poorly adjusted (set much too low) and wood is improperly feed into the machine. (see illustration at right)

Reaching inside this machine to dislodge a jammed piece (while the power is on) with a stick or your hand is extremely dangerous and should never be attempted.

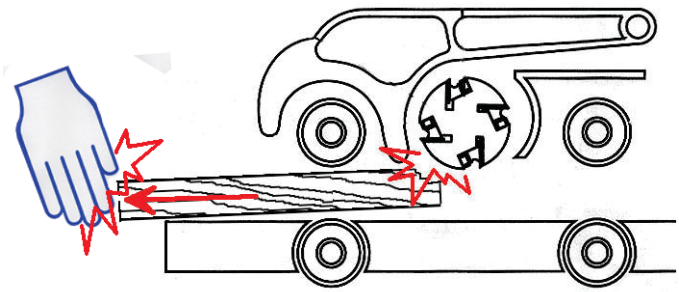

Using the Thickness Planer

Begin by checking the thickness at several places along the length to determine the thickest part of your board. This thickest measurement will determine the table height setting. Turn the table height hand wheel to where the indicator scale reads a position about 1/32 in. less than the thickest part of your board. This machine removes wood on the top side so place your straight/flat side down when feeding into the machine. The infeed roller should easily grab your board and automatically pull it through. After each pass through the machine you must raise the table (turn the hand crank clockwise) 1/4 to 1 full rotation. Repeat this step until you achieve your desired thickness.

Standing to the side, place your board down level with the table and feed it into the machine.

NEVER STAND IN FRONT OF THE MACHINE AND FEED A PIECE INTO THE MACHINE IN THIS WAY.
Kickback is a possibility.

If your board passes only partially through the planer and stops - do not attempt to pull your board out, turn the machine off and wait for it to completely stop before removing your board by lowering the table.

YOU CANNOT PUT MDF OR PLYWOOD THROUGH THE THICKNESS PLANER. SOLID WOOD ONLY!

The Table Saw

The table saw is used to cut solid woods, sheet material (plywood, particle board, mdf, etc.), and various sheet plastics. Compared to the band saw the table saw will cut more quickly, straighter, and give a smoother edge. The table saw is the most versatile of wood shop tools.

It is also the most dangerous power tool in the shop. Complete presence of mind and care must be used when operating the table saw. Carelessness or improper use can result in serious injury.

ALL STUDENTS (INCLUDING THOSE WHO HAVE PASSED THE CERTIFICATION TRAINING) MUST CHECK WITH A TECHNICIAN BEFORE USING THE TABLE SAW. Violators of this rule may be expelled from the shop for an extended period of time.

BASIC FEATURES -

The blade can be raised or lowered to adjust the depth of cut desired. (See fig.) The blade may also be tilted to any angle between 90 and 45 degrees. The blade should be accompanied by a *riving knife* which helps in the prevention of *kickback*. Some woods have internal stresses which cause the wood to close in on the blade and pinch it when ripping. The riving knife helps prevent the blade from being pinched in this way.

The *fence* is used to guide the material when *rip cutting or ripping*.

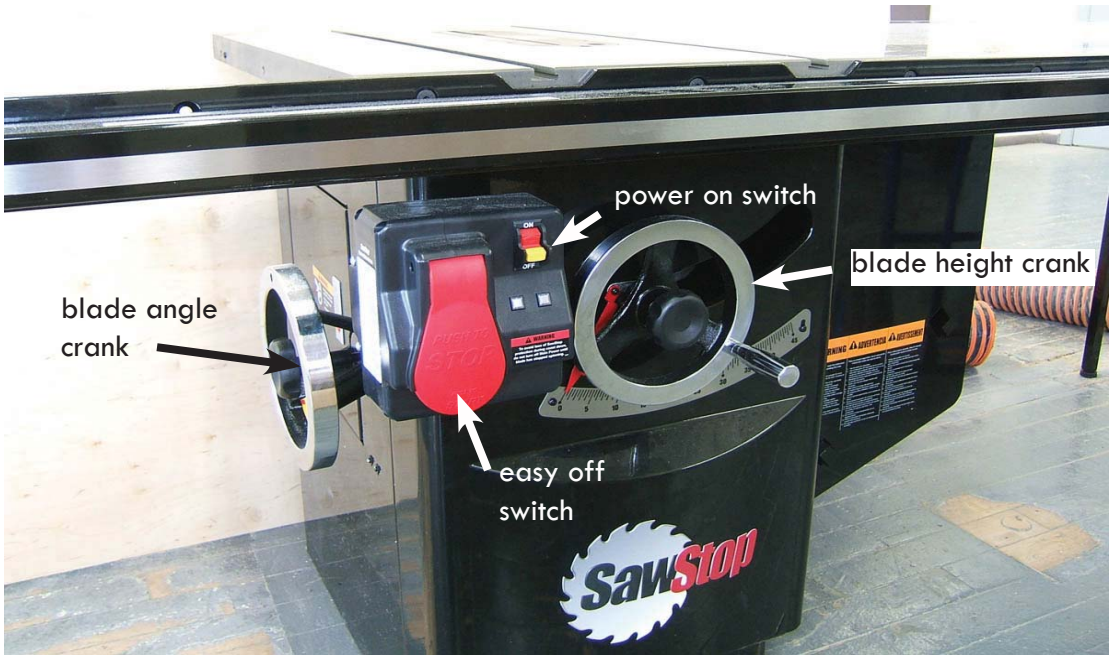

BLADES -

Circular saw blade come in various designs for different operations and different materials. Using the correct blade will give the best results and prevent blade damage. For example: ripping with a cross-cut blade will cause excess heat which may result in a burned edge. Rip blades have larger gullets which enable the blade to remove the large amount of wood chips created when ripping. There is a special blade for cutting acrylics. Please consult the technician about which blade is right for the operation you wish to perform.

Dull or pitch coated blades add to the danger of kickback.

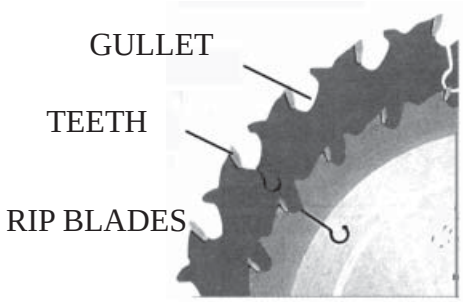

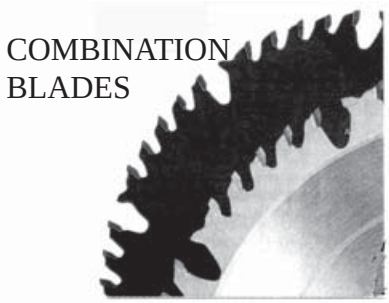

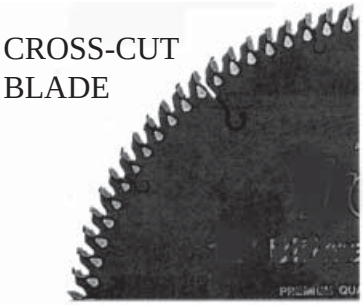

Making cuts on the table saw

Ripping

Ripping is the operation of cutting material lengthwise to a desired width.

Ripping is always done using a fence. NEVER ATTEMPT TO CUT A PIECE FREEHAND (WITHOUT A SUPPORTING GUIDE SUCH AS THE FENCE). FREEHAND CUTTING WILL RESULT IN ***KICKBACK***.

Generally the wider portion of the material goes between the fence and the blade, but not always.

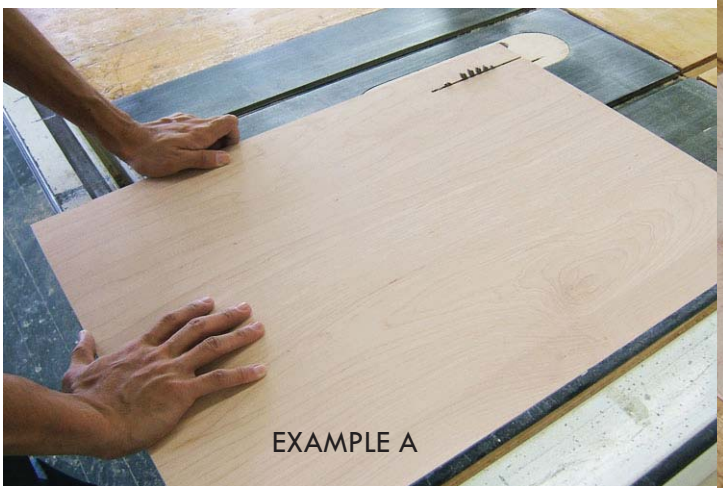

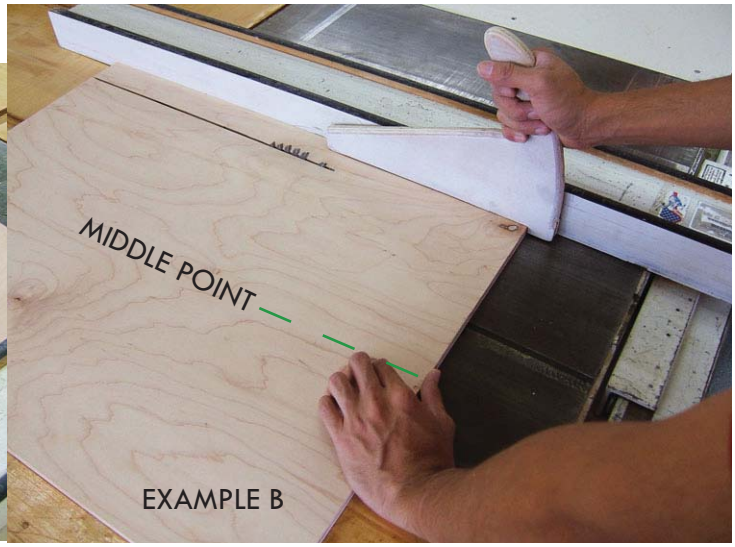

Example A: I have a piece of plywood 20" x 26" which I want to cut to 18" x 26". I would set the fence 18" away from the blade so that the 2" off-cut would be on the outside (or left side) of the blade.

Yet, if from the same piece of plywood I wanted six 2" x 26" strips (Example B) I would set the fence 2" away from the blade so that each strip would come out the same exact width. In this case the wider portion of the piece would be on the out side (or left side) of the blade. The 2" wide pieces would be pushed past the blade using a push stick device.

Any piece less than 7" wide passing between the fence and the blade should be pushed beyond the blade using a push stick.

Never reach over the blade while the blade is spinning to retrieve your work piece. Turn off the saw and wait for the blade to stop completely before retrieving work pieces.

STUDY THESE HAND POSITIONS

The correct hand positions are very important to prevent injuries. The illustration at left shows the correct hand positions for ripping. The left hand is in the best place to hold the wood **down** and **against the fence**. The left hand knuckles are down and thumb is on top. THE LEFT HAND *REMAINS STATIONARY* at this point while the material slides past it. **The left hand never moves beyond the red line.**

HERE (AS IN EXAMPLE A ABOVE) THERE IS NO NEED FOR THE LEFT HAND TO PUSH THE OFFCUT MATERIAL PAST THE BLADE.

Here the left hand is unnecessarily in danger. The left hand should be used to push the off cut part ONLY WHEN THE SIZE AND WEIGHT REQUIRES that it be pushed in order to maintain straight movement of the work piece.

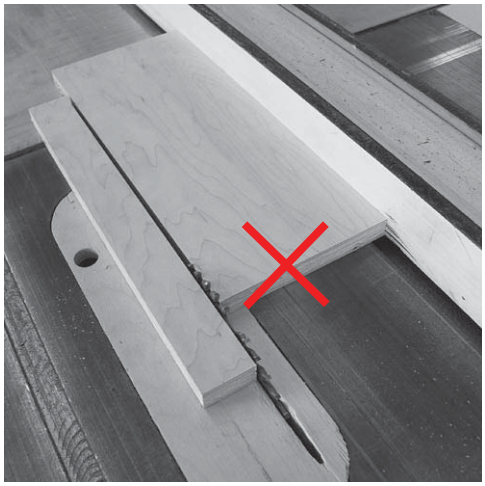

A common mistake is to think that the cut is complete when the off cut separates from the piece you want. At left the piece has not been pushed completely beyond the blade and is in danger of being ejected from the saw.
PUSH YOUR PIECE COMPLETELY BEYOND THE BLADE. – – – – →

If the off cut material is large the left hand is needed to keep the material moving straight. Both hands push at the middle point.
The right hand presses in a slight angle toward the fence. Placing the hands as far away from the blade as possible may appear safer but as the cut comes near to being complete it would cause the blade to be pinched between the two pieces of plywood. This could result in kickback.

Ripping an angle on the edge of a piece

On some table saw models the blade tilts to the right on others it tilts to the left. On all table saw you have the option on putting the fence on either side of the blade. When ripping an angle on the edge of a piece it is usually safer to put the fence in a position where the the blade tilts away from the fence (such as in illus. (A) below). In illus. (A) the piece is free to move upwards away from the blade. If the blade tilts towards the fence (as in illus. (B)) the piece is trapped between the blade and the fence and is more prone to being ejected by the blade.

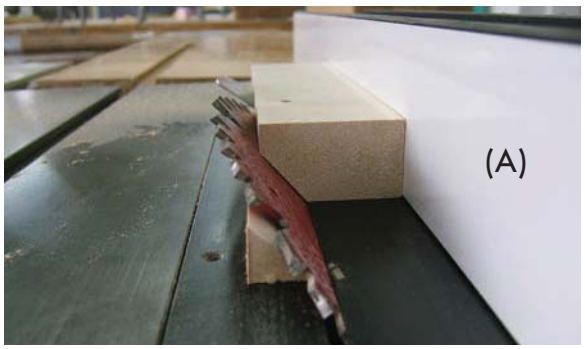

Crosscutting

As the term implies, ***crosscutting*** means cutting across the length of a piece.

Crosscutting requires very different support devices from those used in ripping. The sliding table attachment, the sliding tray (also called a sled), or the miter gauge are used to make crosscuts.

For very large sheets of material the PANEL SAW (shown below right) is the safest and easiest way to crosscut.

When crosscutting with the sliding tabe or sliding tray the hand positions are important. See the illus. (A) at left - the right hand does all the pushing forward as the left hand holds the workpiece back against the fence.

It is a mistake to push both the fence and the off-cut piece as in illus. (B).

panel saw

With the panel saw you can rough cut pieces from a full sheet and then recut your pieces more precisely with the table saw.

The sliding tray on the right is for smaller pieces. Long pieces cannot be supported by this small sled and should be cut with the sliding table.

The left hand holds the work piece down and firmly against the front fence (slightly pulling towards yourself) while the right hand pushes the sled at a point slightly to the left of the blade.

The miter gauge can also be used to make crosscuts. It is also adjustable for making angle cuts.

If your work piece is so small that your hand holding the piece comes within 4 inches of the blade the piece should be held with a clamp or cut on the band saw.

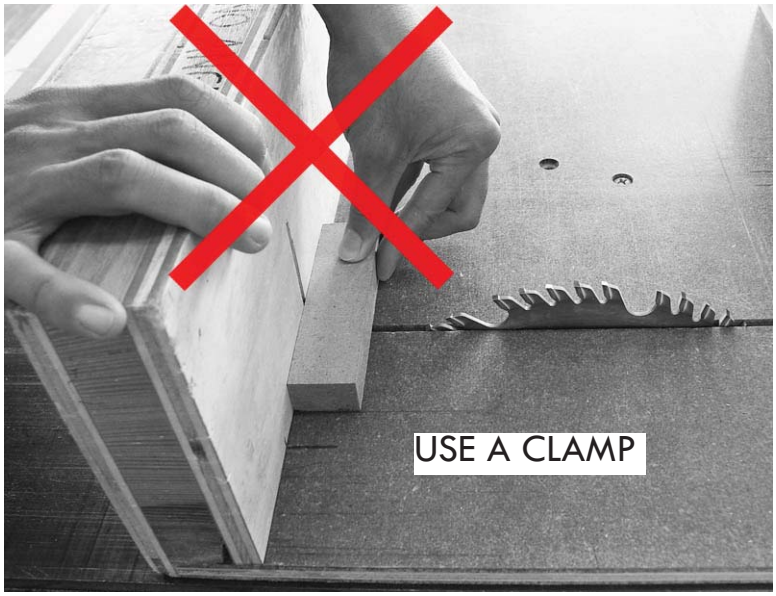

Using the rip fence as a stopping guide when crosscutting with a sliding tray can easily result in kickback (see bottom left). Even with the sled the off-cut piece may rotate and be kicked back. This operation can be safely done if the stop device below is attached to the fence. This provides relief space so that the off-cut does not create tension between the blade and fence.

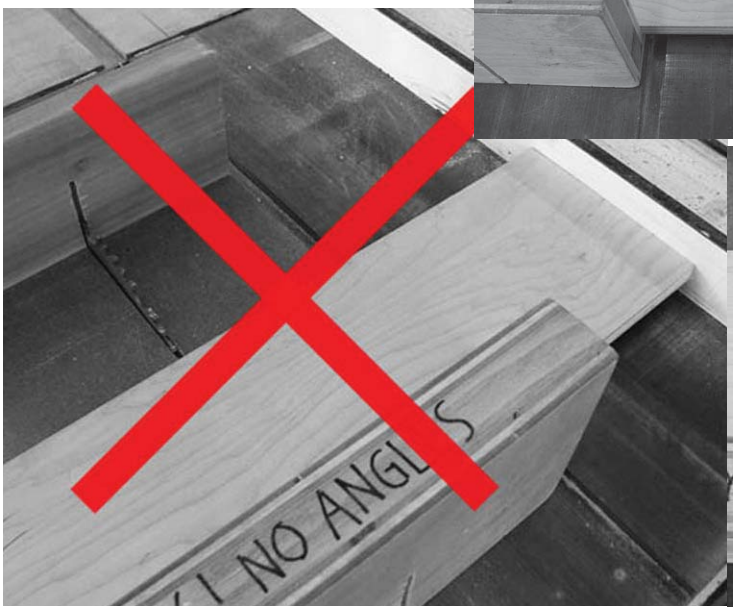

NEVER USE THE FENCE (AS SHOWN HERE) IN COMBINATION WITH A CROSSCUTTING DEVICE.

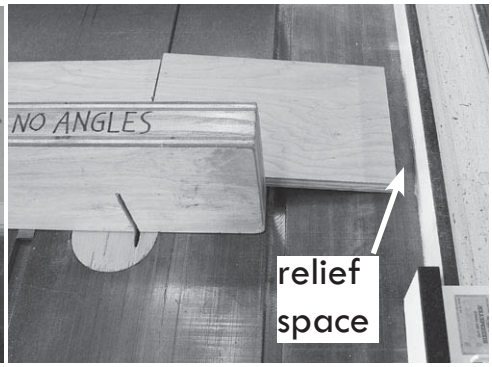

NEVER PULL THE SLED BACK BEFORE REMOVING YOUR PIECE. The piece could bind between the fence and blade and throw the whole sled into you.

Kickback

Kickback is the term used to describe how a power tool can eject a piece of material towards the tool operator. A table saw has the power to throw a full sheet of 3/4" plywood across the shop. Kickback injuries are far more common than finger cuts. Besides the obvious danger of being violently struck by an ejected piece of wood, the instantaneous actions of kickback could pull your hand into the blade.

Causes of kickback

- A workpiece binding between the rip fence and the blade.
- Internal stresses within wood pinching the blade.
- Using a dull blade or a blade with excessive build up of pitch.
- Cutting twisted and warped wood.
- Material dropping on the blade.

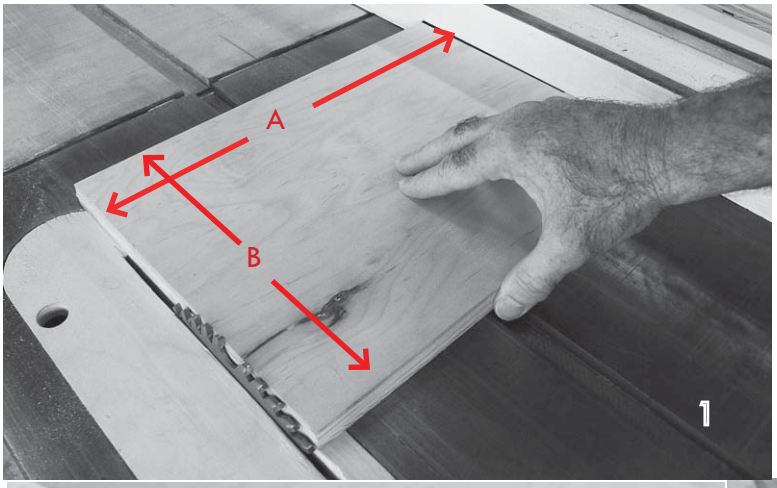

Anatomy of a kickback

Refering to illus.1 whenever demension (A) is longer than demention (B) there is a strong danger of kickback. Even a piece that is correctly oriented to the fence (demension (B) being longer than (A)) can be kicked back if it is not correctly fed into the saw.

As the piece is pushed it is very difficult to keep the piece moving straight. The force of the blade causes the piece to rotate slightly. This creates a tremendous tension between the blade and the fence.

As the back edge of piece reaches the rear part of the blade the upward force of the blade causes the piece to climb up and over the blade.

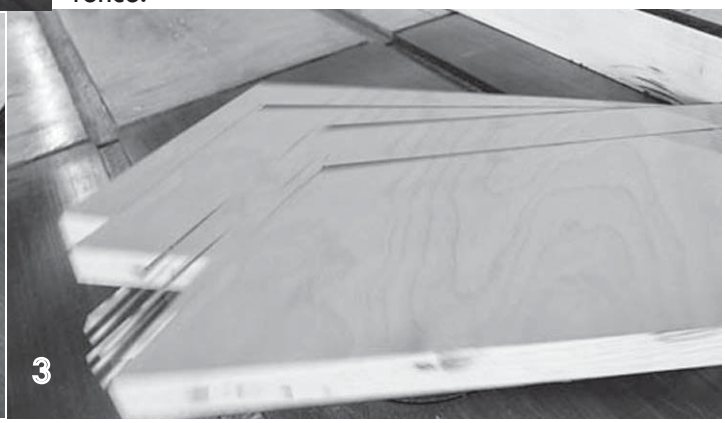

With a frisbee like action, the blade then ejects the piece with great force and towards the saw operator.

It our shop we insist that students

NEVER CROSSCUT USING THE RIP FENCE

The ***riving knife*** is a very important safety guide. It can prevent kickback in many situations, but not in all situations. The riving knife gets in the way of some crosscutting operations so it is often removed. Make sure that the riving knife is installed before making a rip cut.

The presence of the Rifing knife does NOT make it okay to attempt crosscutting with the fence.

Diagonal cuts

Diagonal cuts are made by securing the piece you wish to cut to a secondary piece of sheet material using either screws or hold-down toggle clamps. The piece being cut must be very secure since any shifting may cause kick-back. NEVER ATTEMPT TO MAKE A DIAGONAL CUT FREEHAND. Using the band saw is the easiest and safest way to make diagonal cuts but the table saw will give a straighter cut.

The Band Saw

As the name implies the band saw mainly consists of a steel band (blade) which is held in tension by two (or sometimes three) wheels and is driven through a table while being guided by upper and lower blade guides units.

The band saw blade allows freehand curves to be cut as well as straight rips or crosscuts. The band saw table may be tilted to make angled cuts. The upper blade guard/guide can be adjusted according to the thickness of the material being cut.

A wide variety of materials can be cut on the band saw depending on the type of blade installed.

These include: all natural wood, manufactured sheet material, acrylics, aluminum and other non-ferrous metals, and mild steel (on a specified metal band saw).

Band saw blades come in a wide variety of tooth sizes and shapes all designed to cut materials of particular qualities. Therefore if you are not sure about which band saw and/or blade is suitable for your material please ask a technician before attempting a cut.

One disadvantage of the band saw is that it does not leave as smooth of a finish cut as the table saw.

Hazards of the Band Saw

The band saw is a comparatively friendly and safer power tool than circular saws. Fortunately, kickback is not a concern with the band saw because of the fact that the band saw blade moves downward through the table rather that spinning towards the tool operator.

In school shops band saws are the most frequently used cutting tool and consequently injuries do happen. Because of the fact that cuts are made by pushing a piece of material into the blade the fingers or thumbs are at risk of being cut if the operator is not very careful about hand positions. Fingers or thumbs may slip off of the work piece and contact the blade.

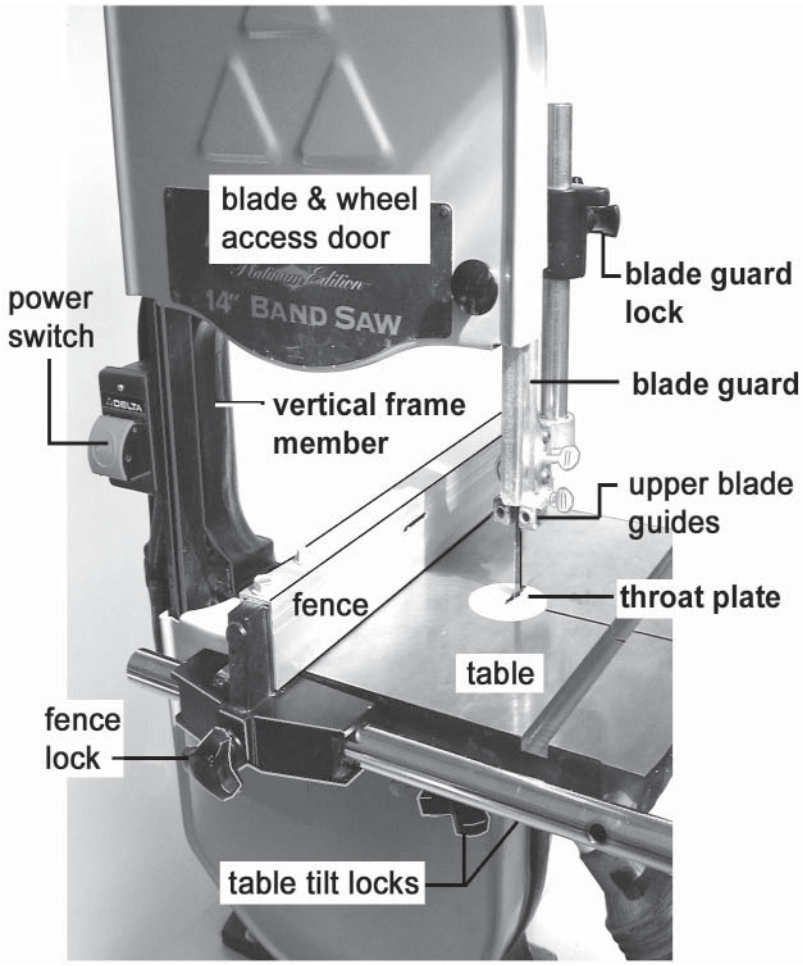

Illustrations below show good and bad thumb positions.

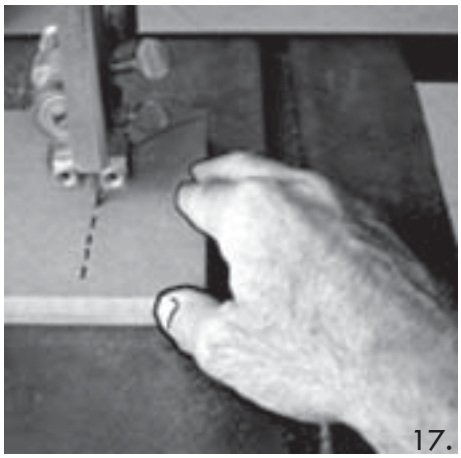

Choosing the right band saw

In the Pratt Industrial Design Shop there are a variety of band saws. One generalization that could be made is that the thicker and denser the material the larger (and more powerful) the band saw should be. One of the most important factor in choosing a band saw is the blade it has. For ripping a wide blade is best since a narrow blade will tend to wander from side to side. If you need to cut a tight curve a wide blade will not be able to make the cut you want and you should choose a narrow blade. The number of teeth per inch is also an important factor. A coarse tooth blade will cut thick or hard wood easier without burning while a fine tooth blade cutting the same wood will clog up and cause burning. Consult the technician on duty if you are not sure about this decision.

Ripping on the band saw

Ripping means cutting a piece lengthwise to a certain width. The fence is used to guide your material. Feed your material into the blade at a moderate speed. Excess feed speed puts strain on the blade, the blade guides and the motor. The sounds of the machine will tell you when you are causing undue stress which means "slow down on your feed speed".

THE BLADE GUARD UNIT SHOULD ALWAYS BE ADJUSTED TO THE CORRECT HEIGHT BEFORE CUTTING. There should be about 3/8 in. clearance between the blade guides and the top of your work piece.

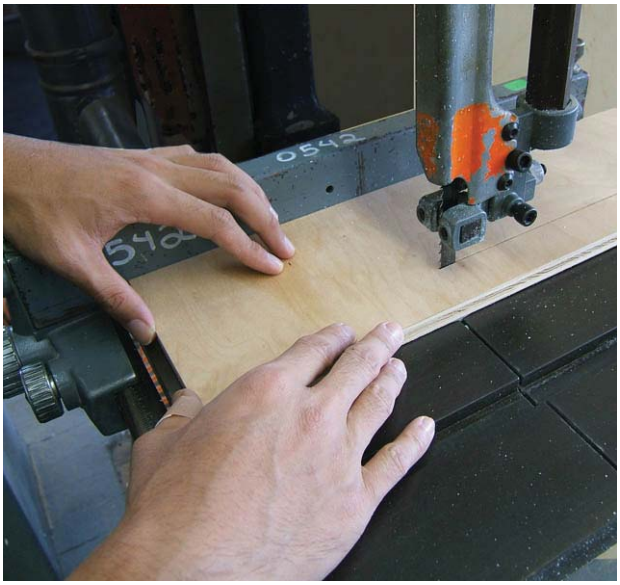

If your piece is small you can use a second piece of material as a pushing device.

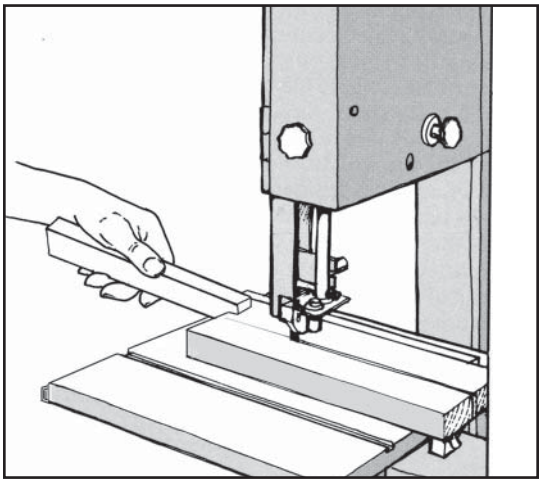

If the fence is set closer than 3 inches from the blade or whenever your cut requires that you push close to the blade use a push stick or some piece of scrap wood to complete the cut.

Crosscutting

As the term implies ***crosscutting*** means cutting across the length of a piece.
The miter gauge is used to make crosscuts. The miter gauge can be set square or to any angle between 90-45 degrees. The work piece is held firm against the miter gauge as you push it into the blade.

Cutting cylindrical pieces takes extra care. Dowels must be held very firmly to prevent spinning when contacting the blade. A round object may spin as it contacts the blade. This may cause your fingers to be pulled into the blade before you have any chance to react. Discs or spheres must first be attached to a secondary square piece which can add stability and prevent spinning.

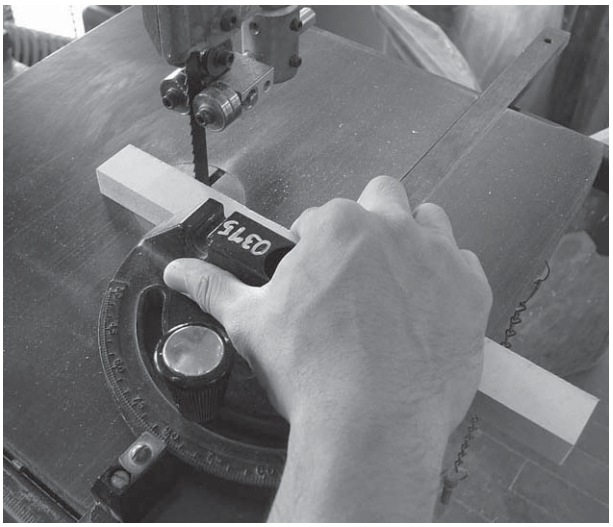

A miter gauge will help you make a square cut. It can also be set to angles up to 45 degrees.

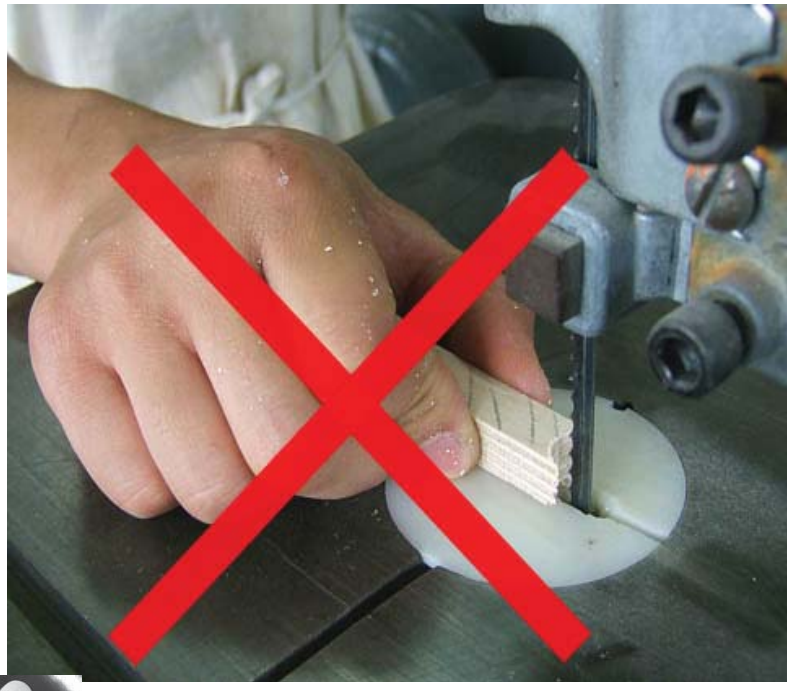

If we find you attempting to make any cuts like these you may be ejected from the shop.

Use a hand screw (wood clamp) to hold small or disc shaped pieces. →

NEVER ATTEMPT TO HAND HOLD AND CUT A SPHERICAL SHAPE, BALL, OR DISC.

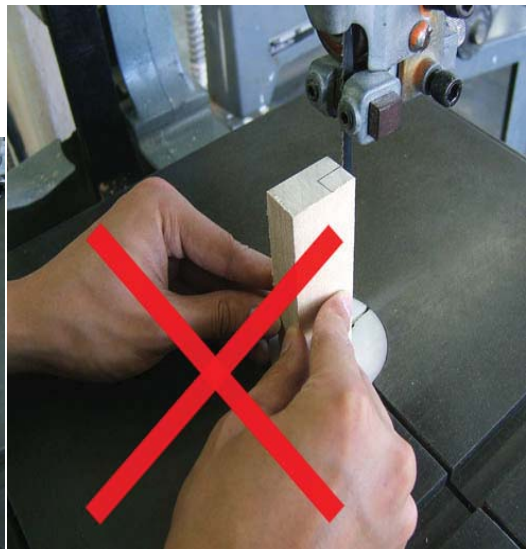

Tall narrow pieces are not stable and can easily move in a way that pulls your fingers into the blade.

Cutting curves

Before beginning a curved cut there are a few things to consider:

Is the blade the correct width for the radius or tightness of the curve you wish to cut?

A narrower blade will cut a tighter curve (or smaller radius). Attempting to cut a curve with a blade that is too wide will result in harmful stress on the machine & blade and could cause the blade to break.

Do you need to make relief cuts? (see illus. below) Relief cuts reduce stress on the blade and can prevent jams.

Will the work piece run into the ***vertical frame member*** and get trapped?

Marking your work piece on the correct side will avoid getting into a jam. If your work piece gets jammed do not try to pull it out with the power on. First turn off the power and carefully retrieve you work piece.

When cutting on the band saw avoid pulling back work that is partially cut. Pulling back work (while the power is on) may pull the blade off the wheels.

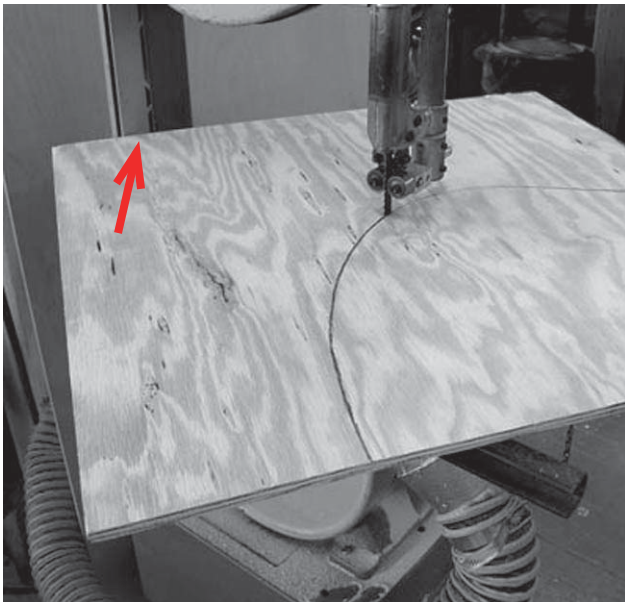

This cut cannot be completed because it ran into the vertical frame member.

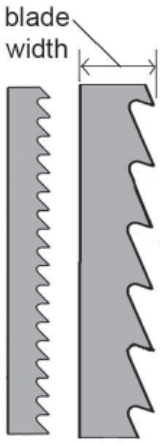

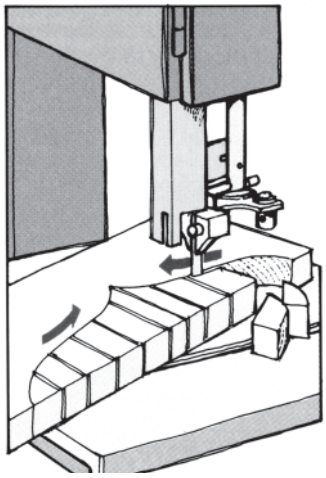

Relief cuts prevent the blade from getting trapped.

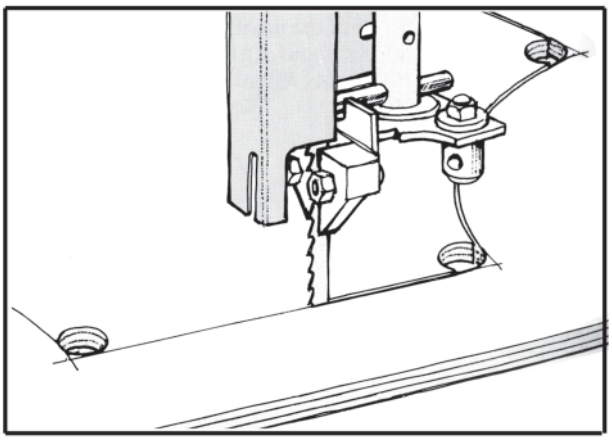

Strategically drilled holes make this operation much easier.

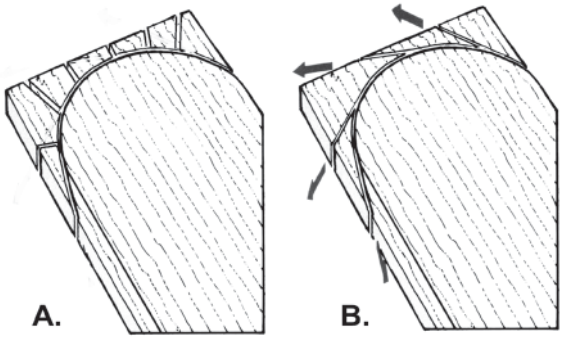

Two ways to achieve a radius end cut.

The Drill Press

The drill press enable you to bore holes in material exactly square or at an angle and with great precision and control.

It has a depth stop mechanism which can limit the depth of a hole.

The table can be tilted for drilling at an angle.

The shop has a variety of jigs and holders which can make your drilling operations easier and more precise.

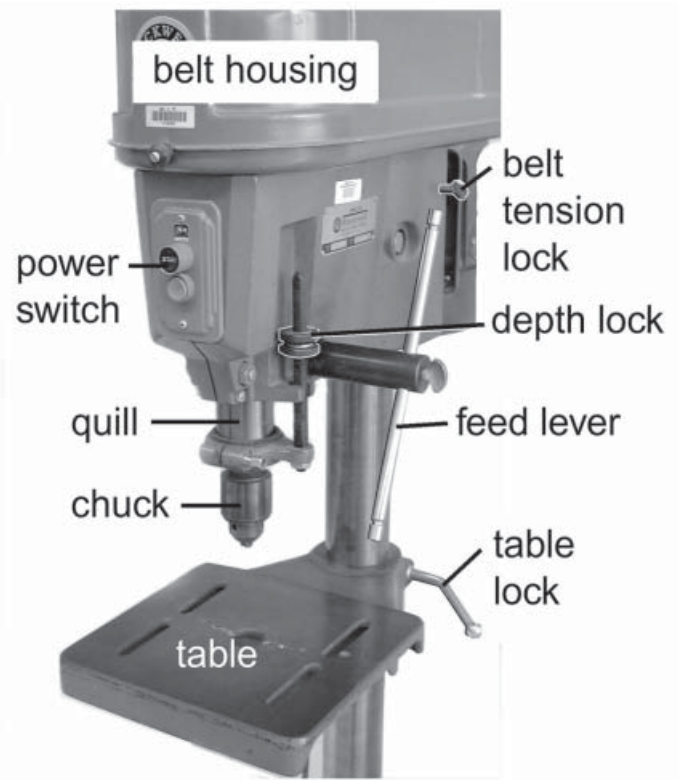

THE TABLE LOCK MUST FIRST BE LOOSENED BEFORE THE TABLE CAN BE ADJUSTED.

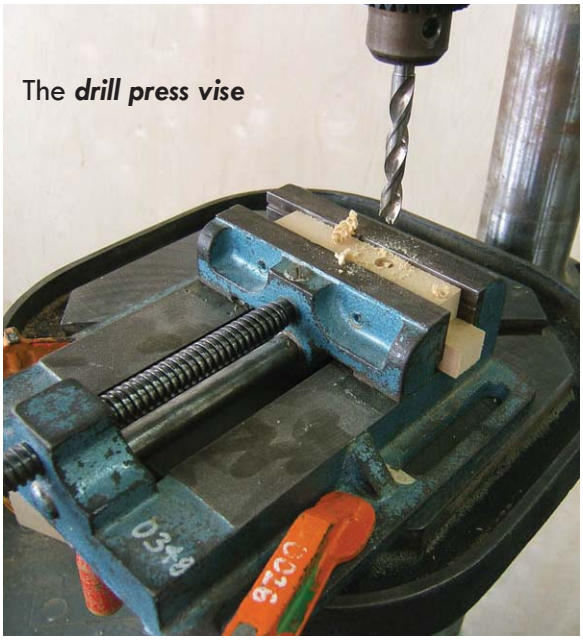
The ***drill press vise***

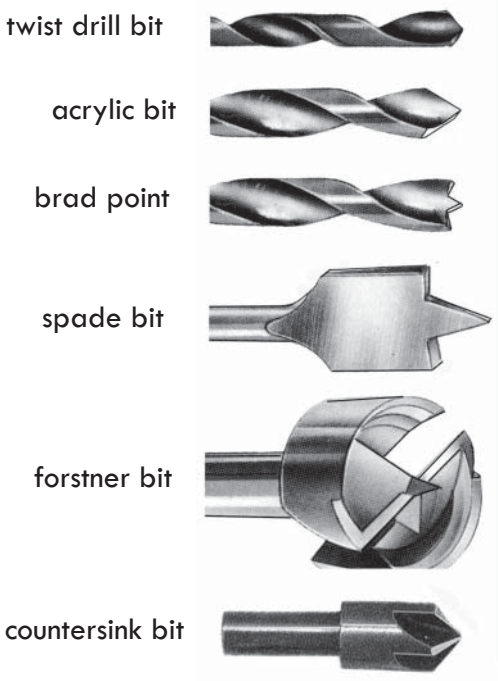

The ***twist drill bit*** is the most common. It is a general purpose bit which works for wood, metal, acrylic & other materials. For wood the twist drill bit will cause some rough edges on the hole.

The ***acrylic bit*** has a special taper and cutting edge which scrapes away the acrylic material as it penitrates. This action causes less cracking and break out on the bottom side of the work piece.

On wood the brad point or forstner bit will give a hole with sharp edges. The ***brad point***, ***spade bit***, and ***forstner bit*** are only for wood or other soft materials, never for steel or abrasive material such as stone/concrete.

The ***hole saw*** is can make larger size holes in wood, acrylics, aluminum and (if is a bi-metal type) steel.

The ***countersink bit*** give a cone shaped hole which allow the head of screws to fit flush with the surface.

The ***pilot countersink bit*** will drill a pilot hole and countersink in one operation.

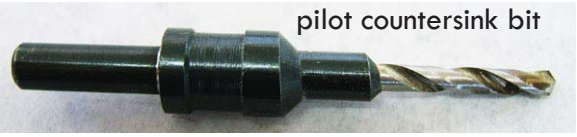
pilot countersink bit


hole saw

Drilling operations

Always have a piece of sheet material (provided by the shop) covering the bed (under your piece) when drilling. This helps prevent drilling into the table bed which will damage the bed and possibly ruin the drill bit you are using.

Choose the correct drill bit for the material you are drilling. Consult a technician if you are not sure which bit is correct - DO NOT GUESS!

The bit rotation speed can make a big difference in the cutting action of the bit. For example using very high speeds may cause burning of your work piece and dulling of the bit. In some cases high speeds are appropriate. There are several factors involved in the choice of bit rotation speed - ask a technician. Some drill presses have a variable speed control while other drill presses require changing the belt placement on pulleys.

Your work piece should be secured in some way - either directly clamped to the bed, in a vice or a jig that is clamped to the bed. Material that is not secured can easily be grabbed and spun by the bit - if the work piece has sharp corners or edges injury may occur. The larger the bit the more likely that the bit will try to spin the piece being drilled.

Cylindrical pieces (such as dowels) can be held in a V-block (see below).

Drilling metal is far more risky than wood. With metal the drill bit often grabs the work piece and tries to spin it. Metal work pieces should always be clamped or secured in a vice. If you are not experienced with metal drilling please ask a technician for assistance.

Using a fence prevents your work from spinning. It also allow you to drill more that one hole in exact alignment.

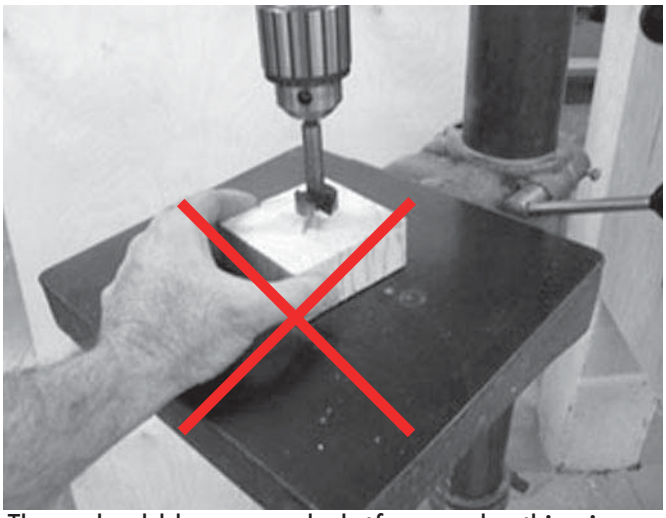

There should be a wood platform under this piece and it should be clamped, not hand held.

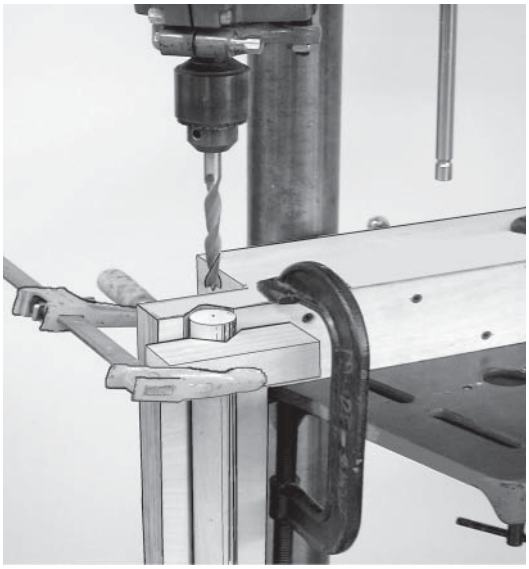

Here V-blocks are effectively used to hold a cylidrical piece for drilling.